# QDW90A Hirschmann Pressure Transmitter

## Product Overview

The pressure sensitive core of the pressure transmitter adopts a high-performance silicon piezoresistive pressure filled oil core, and the internal ASIC converts the sensor millivolt signal into a standard long-distance transmission current signal, which can be directly connected with the computer interface card, control instrument, intelligent instrument or PLC. The series of products are widely used in industrial process control, petroleum, chemical, metallurgy and other industries.

## Product Feature

- ▶ RS485 communication port (optional)
- ▶ Using digital compensation and nonlinear correction technology
- ▶ High sensitivity, high precision
- ▶ No moving parts, reliable performance
- ▶ Offers a wide range of pressure ranges for low, medium and high pressure
- ▶ Excellent field interchangeability, can be customized according to customer requirements

## Product Parameter

Output signal :4~20mA

Measuring range :-0.1~100MPa

Pressure type: gauge pressure, absolute pressure, seal pressure

Power supply :DC12~32V(5V, 3.3V voltage only customized)

Compensation temperature :-10~70°C

Operating temperature :-40~70°C

Response time :≤10mS

Storage temperature :-40~125°CC

Zero temperature drift: 0.15%FS

Sensitivity temperature drift :±0.15FS

Overload pressure :150%FS

Mechanical vibration :20g(20~5000Hz)

Impact :100g(11ms)

Comprehensive accuracy :0.2, 0.5 optional

Long-term stability: Soil 0.2%FS/ year

Insulation :100M2, 250VDC

Material :IP65

Media compatible: Various liquids or gases compatible with stainless steel

Features :RS485 communication interface; Support networking application; Using digital compensation and nonlinear correction technology; High sensitivity; High precision; No part reliable performance, provide low pressure, medium pressure, high pressure rich pressure range.

## Working Principle

The pressure sensor diffuses a Wheatstone bridge on the diffused silicon wafer, and the pressure of the measured medium (gas or liquid) changes the resistance value of the bridge wall (piezoresistive effect) to produce a differential voltage signal, which is converted into a standard analog signal (as shown in the figure) or a digital signal by a special amplifier.

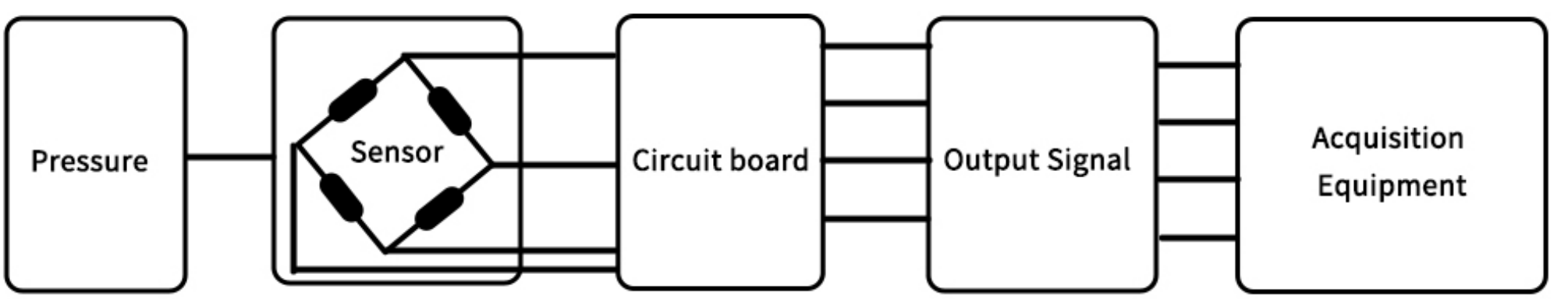


## Product Size

Note: Current and voltage output pipe length :35mm, 55mm, 65mm(default: 55mm)

RS485 output pipe length :65mm

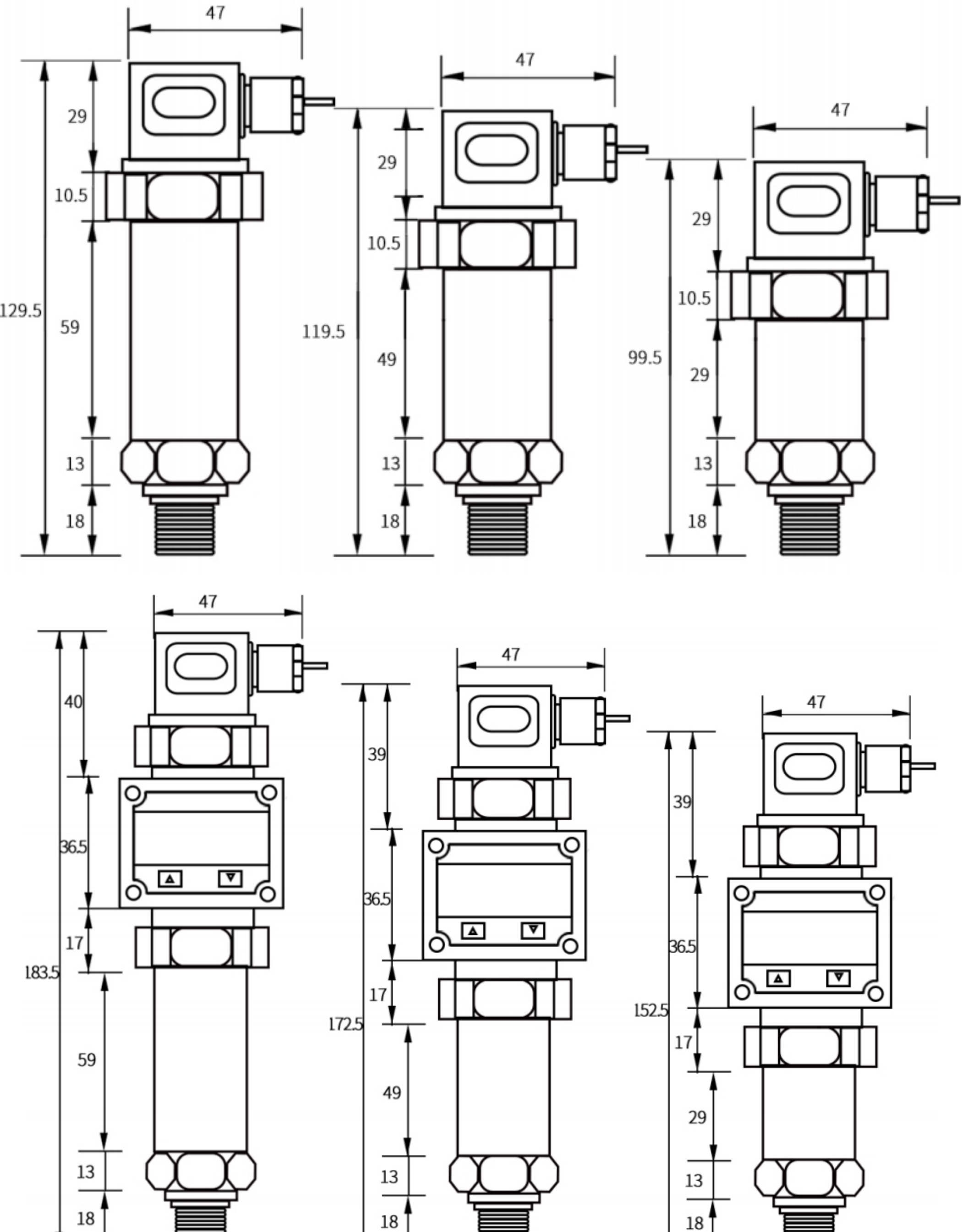

## Wiring And Installation

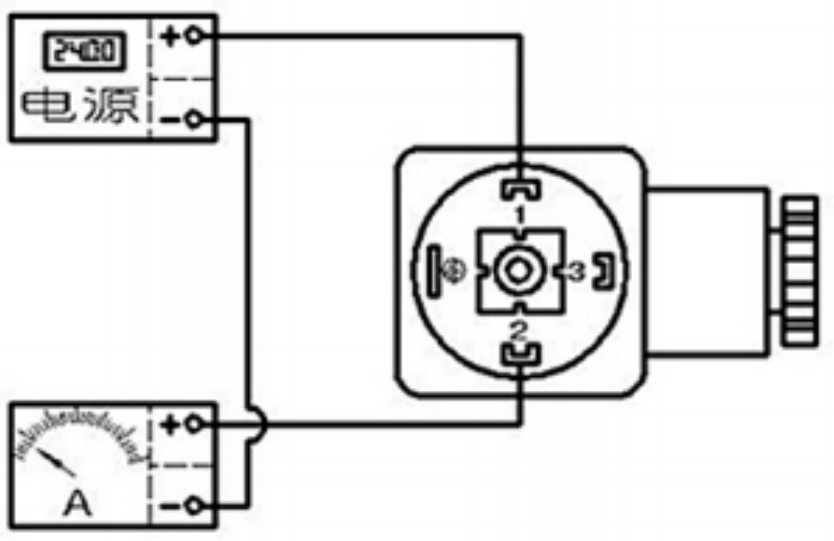


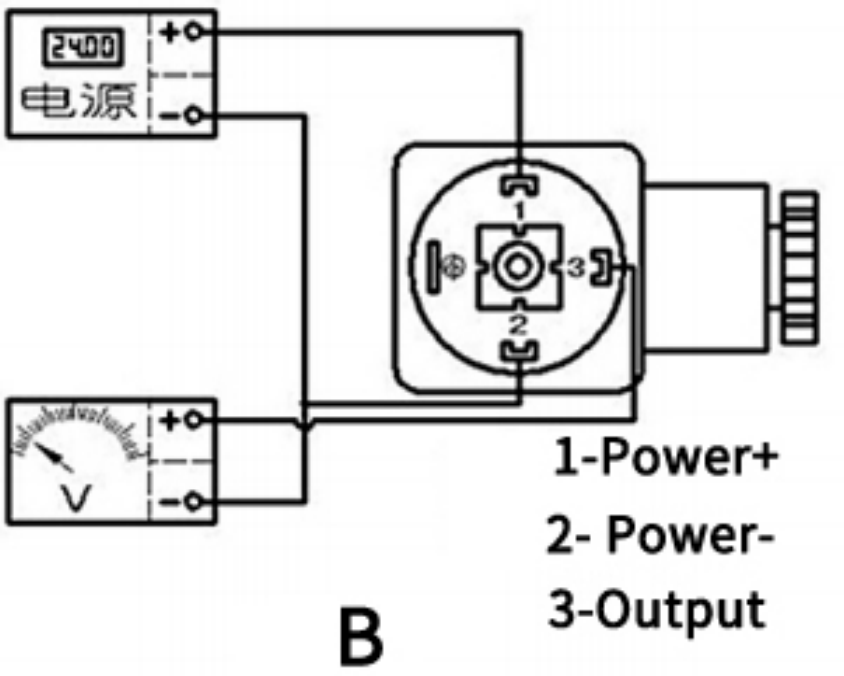


① Loosen the M3 screws with cross pan heads

② Remove the plastic plug-in

③ Pry the connector into the socket with a flat-head screwdriver inserted from the removal slot

④ After prying out, insert the shielded cable through the cable outlet hole, connect the cable to the wiring terminal on the back of the wiring base according to the wiring diagram, and restore the cable

▶ After the wiring is completed, the direction of the wiring seat can be changed.

▶ The user must ensure that the outer diameter of the cable used is within the allowable range of the sleeve. In addition, ensure that the cable is firmly installed in the sleeve without gap

▶ Be sure to install the socket properly to ensure the level of protection

## Working Wire

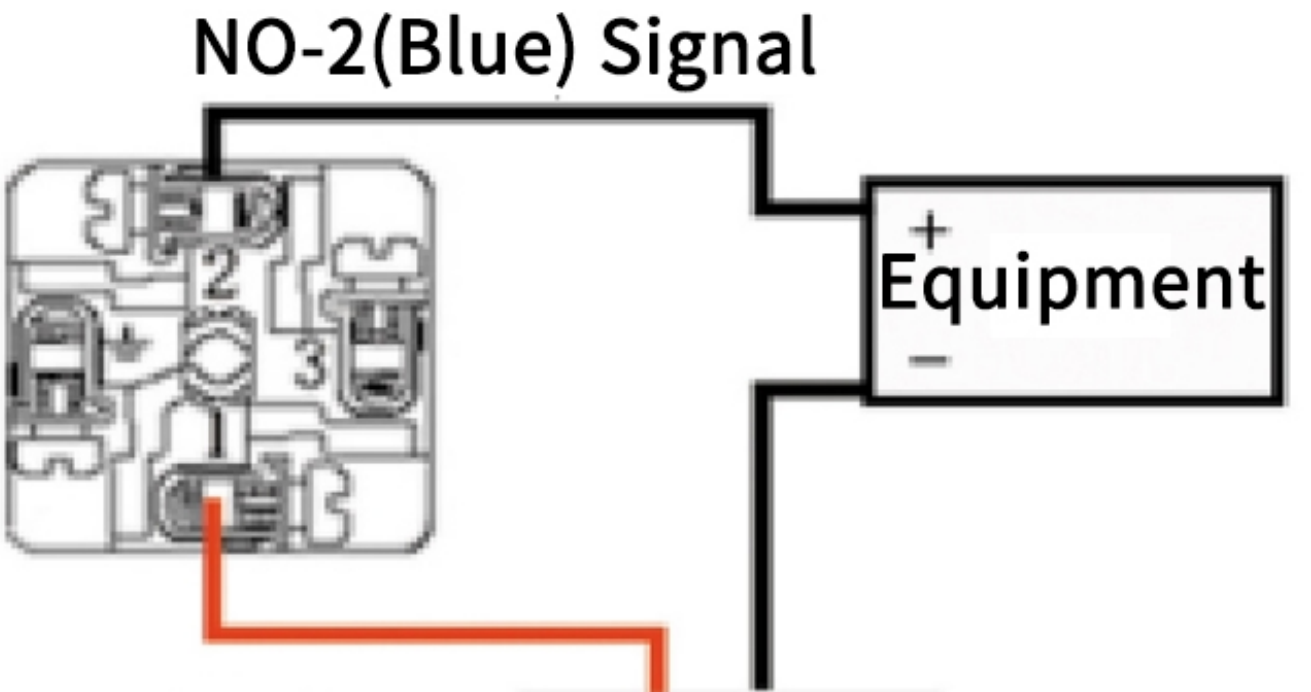

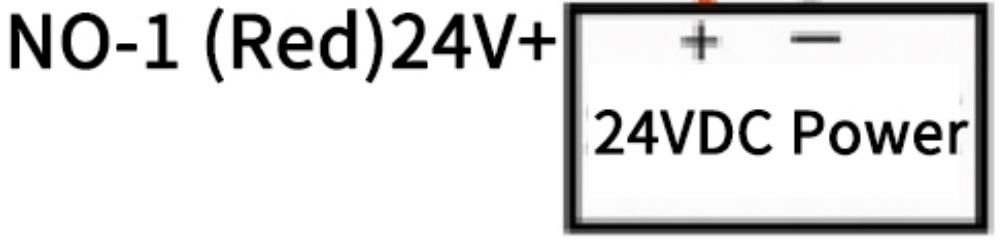


4-20mA Current Signal 2-wire

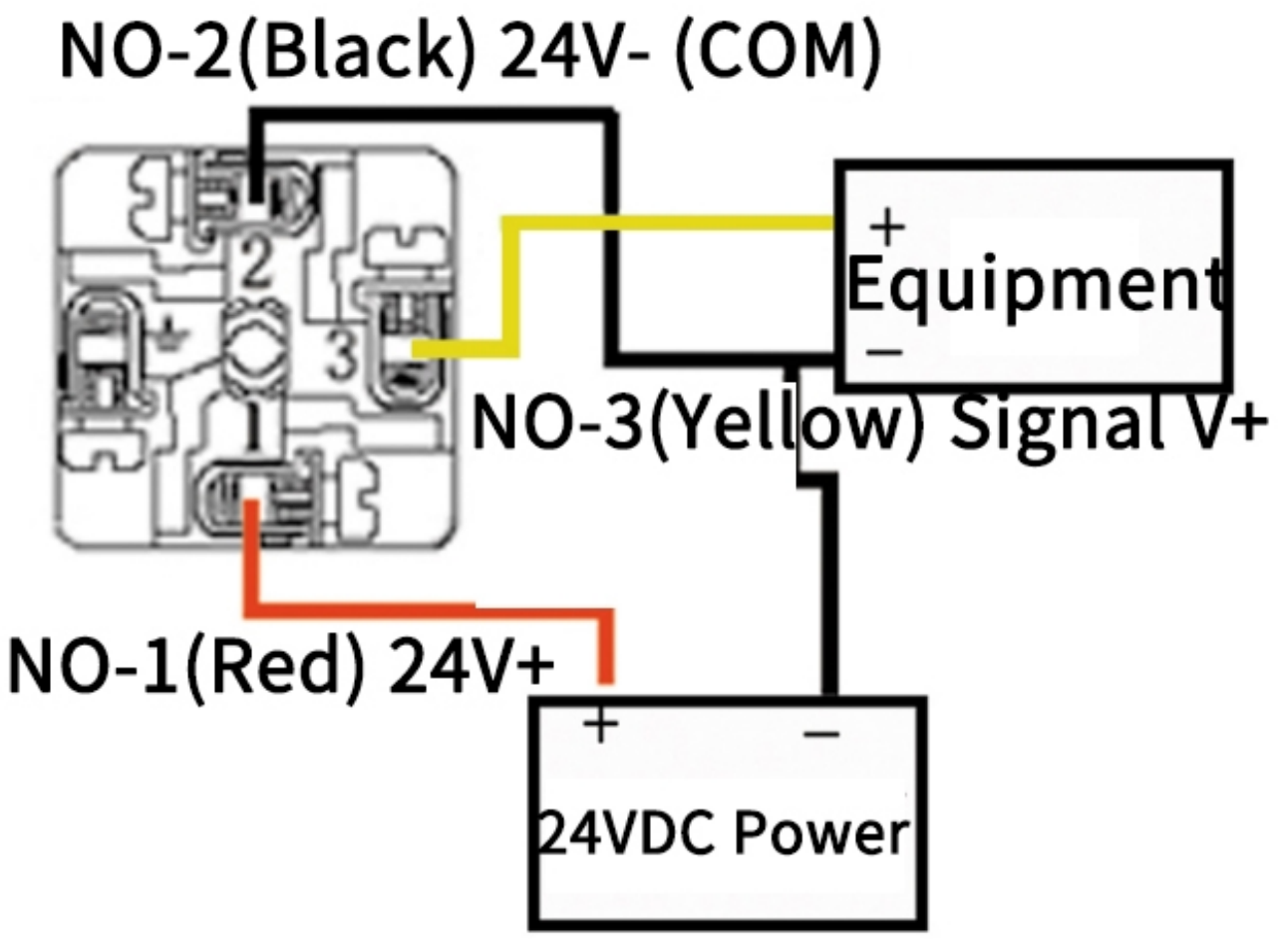


0-10V Viltage Signal 3-Wire

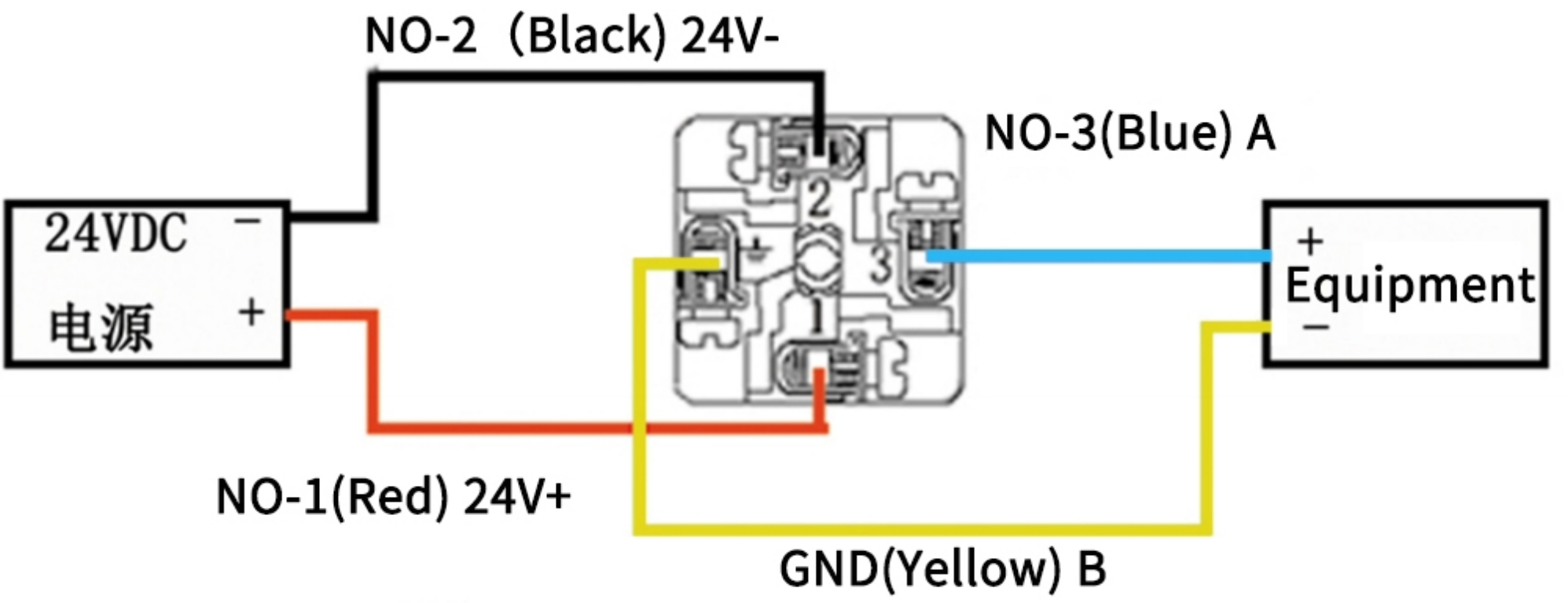


RS485 4-WIRE

Installation Precautions

> Warning!

① The equipment must be installed without pressure and power supply.

> Warning!

The transmitter must be installed by a technician who has read and understood this operating manual.

> Danger!

③ The transmitter uses diffused silicon oil-filled core, improper use will cause explosion accidents. To ensure safety, do not measure oxygen.

Danger!

④ This product is not explosion-proof, and its use in the explosion-proof area will cause serious personal injury and significant material loss.

Warning!

⑤ Do not measure media incompatible with the transmitter contact material.

⑥ When you receive the product, please check whether the package is intact, and check whether the transmitter model and specifications are consistent with the products you purchase.

⑦ No modifications or changes can be made on the device.

⑧ To be handled lightly can not be thrown at will, do not use brute force when installing the transmitter.

9) If the pressure interface is up or sideways when the transmitter is installed, it is necessary to ensure that no liquid flows in the equipment housing, otherwise moisture and dirt will block the atmospheric port near the electrical connection, and even cause equipment failure. Ensure that the threaded edge of the electrical connection is free of dust and dirt.

@ Try to install in the case of small temperature gradient change.

① If the transmitter is installed in a harsh site will encounter dangerous damage such as lightning strike or overvoltage, we recommend that the user carry out lightning protection and overvoltage protection between the distribution box or power supply and the transmitter.

@ When measuring steam or other high temperature media, be careful not to let the medium temperature exceed the operating temperature of the transmitter. If necessary, a cooling device should be installed.

During installation, a pressure stop valve should be installed between the transmitter and the medium in order to repair and prevent the blockage of the pressure inlet from affecting the measurement accuracy.

During the installation process, the transmitter should be tightened from the hexagonal nuts at the bottom of the equipment with a wrench to avoid directly rotating the upper part of the equipment and thus causing the connection line to be disconnected.

⑤ This product is a weak device, wiring must be separated from the strong cable, should comply with the relevant national wiring standards (GB/T50312-2016)

⑮ Ensure that the power supply voltage meets the transmitter power supply requirements. Ensure that the high pressure of the pressure source is within the range of the transmitter.

In the process of pressure measurement, pressure should be slowly pressurized and relieved to avoid instantaneous high pressure or low pressure.

Warning!

(8) When disassembling the transmitter, ensure that the transmitter has been disconnected from the pressure source and power supply, so as to avoid accidents caused by media ejection

⑩ Users in the use of please do not disassemble, not to touch the diaphragm, so as not to cause product damage.